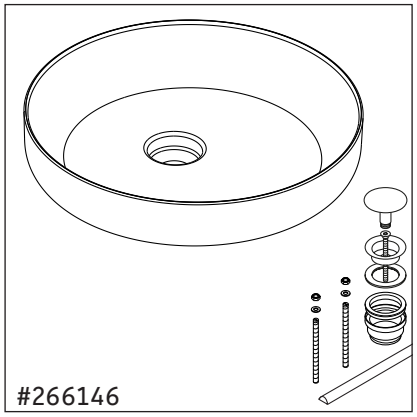
#266146

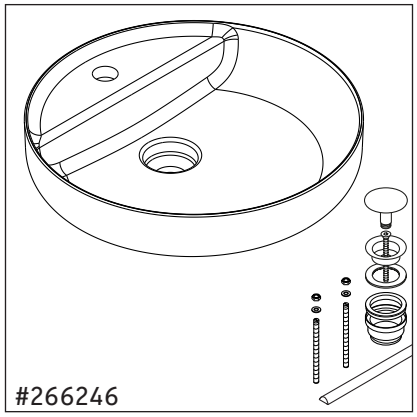
#266246

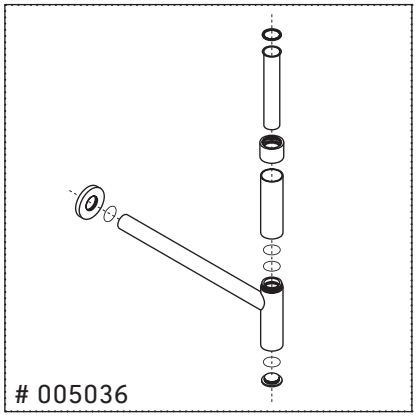
005036

1

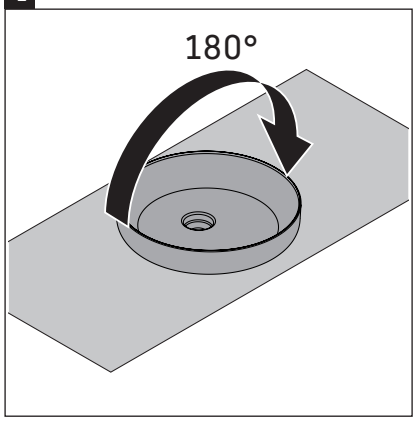
180°

2

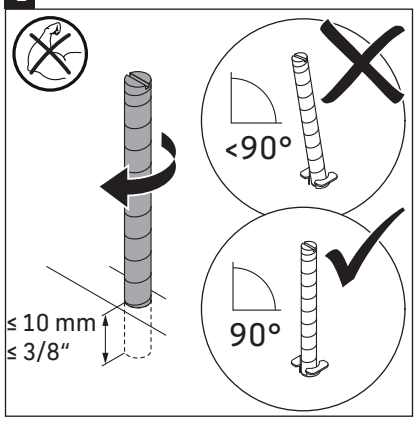
<90°
90°
≤ 10 mm
≤ 3/8"

3

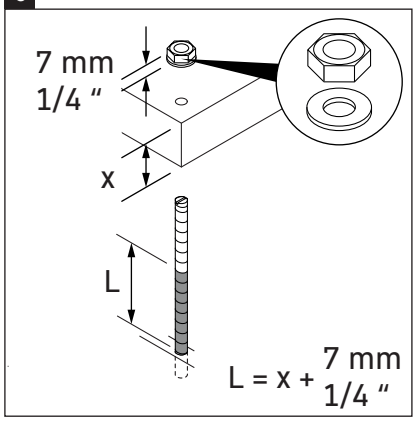
7 mm
1/4 "
x
L
L = x + 7 mm
1/4 "

4

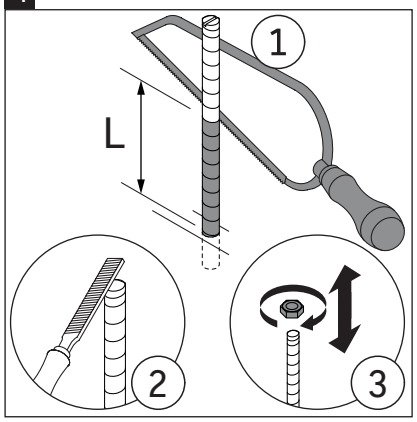
1
L
2
3

5

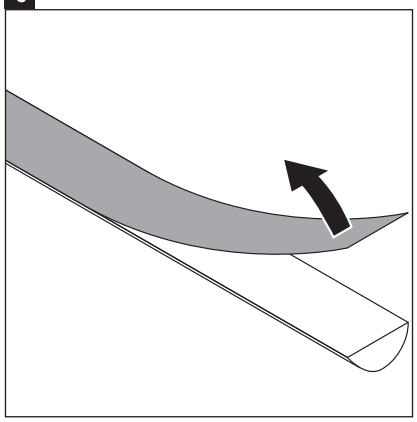

6

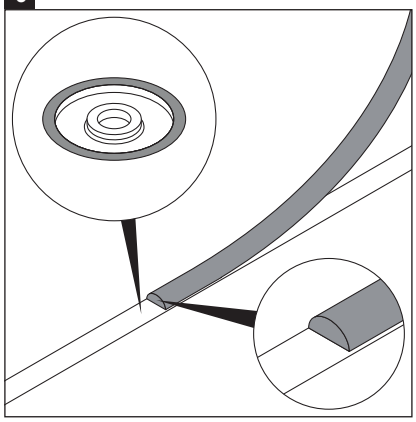

7

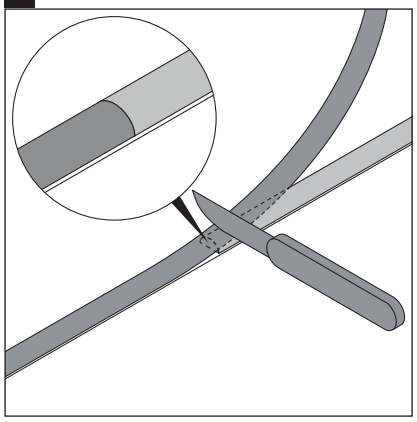

8

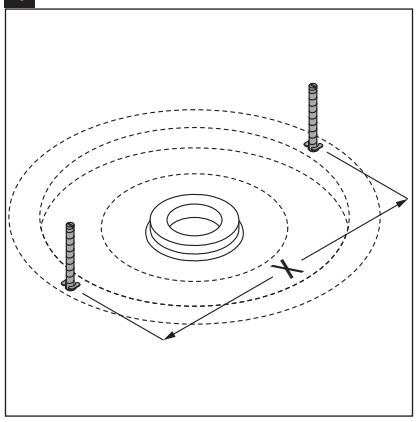
X

9

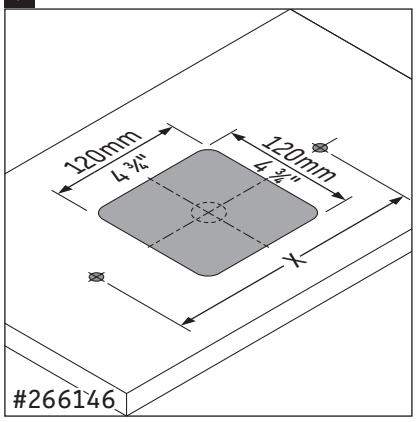
120mm
4 ¾"
120mm
4 ¾"
X
#266146

10

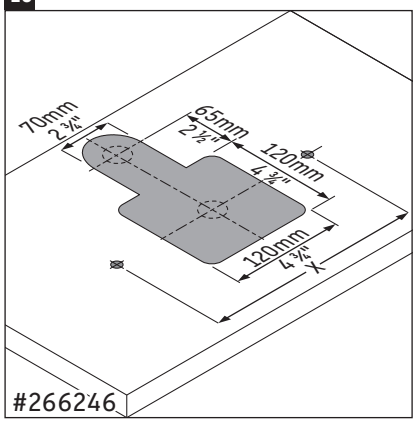

11

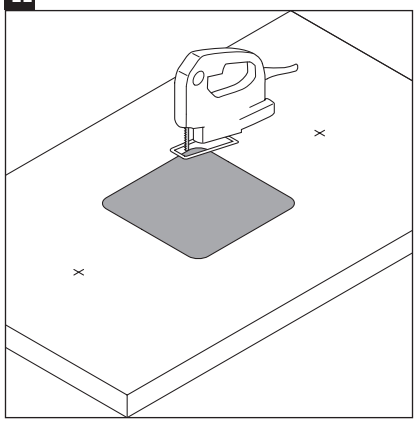

12

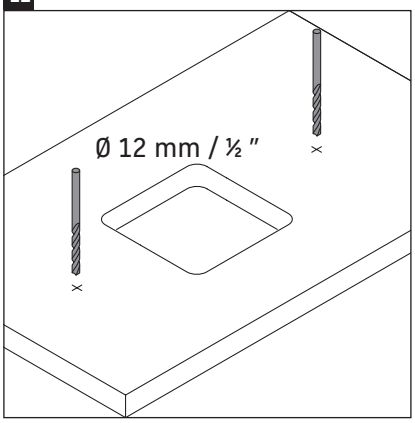

13

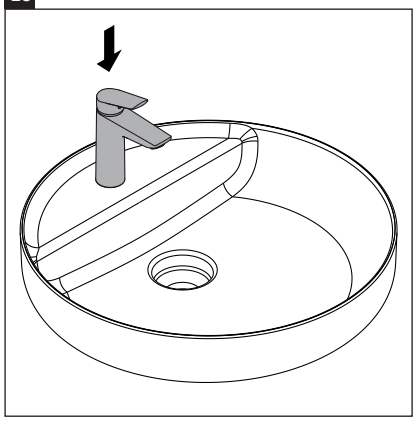

14

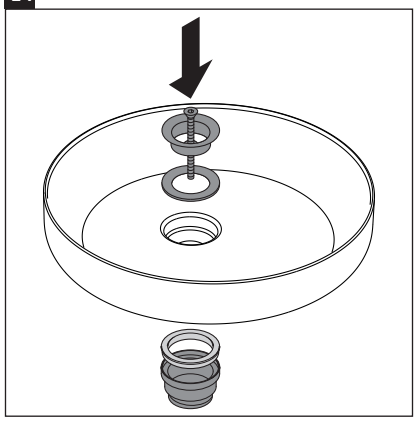

15

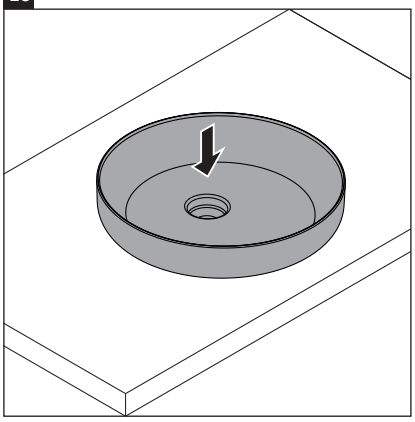

16

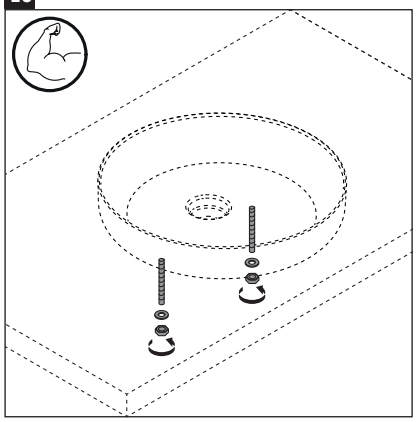

17

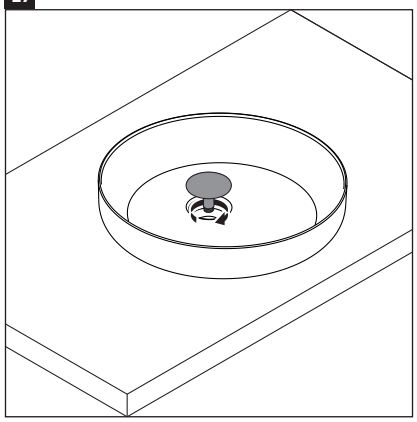

18

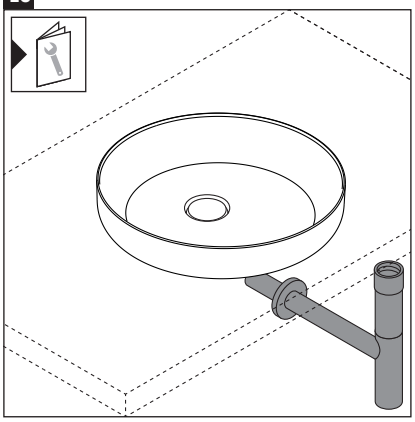

19

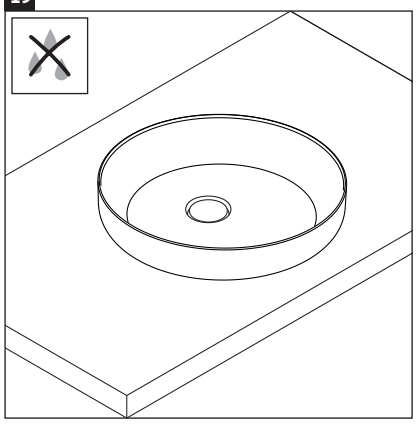

DURAVIT AG, Werderstr. 36, 78132 Hornberg, Germany, Phone +49 78 33 700, Fax +49 78 33 70 289, info@duravit.de, www.duravit.de

70300251
Order no.: MI_70300251_23.021 - We reserve the right to make technical improvments and design modifications to the products illustrated.